Connection Wires
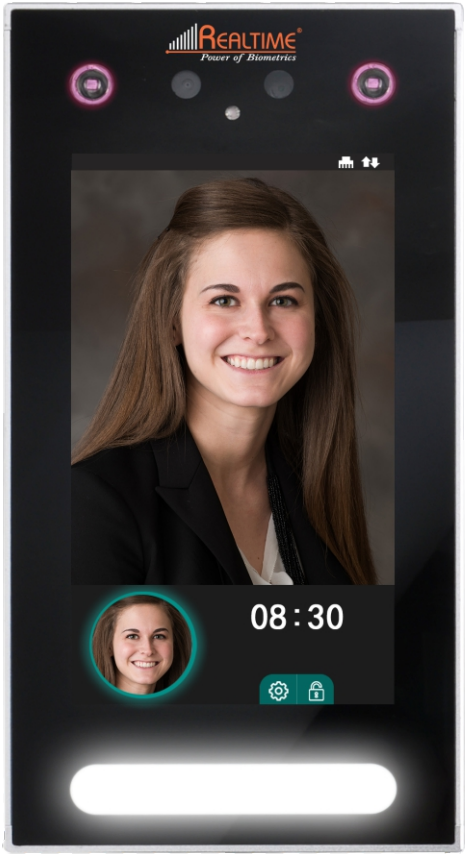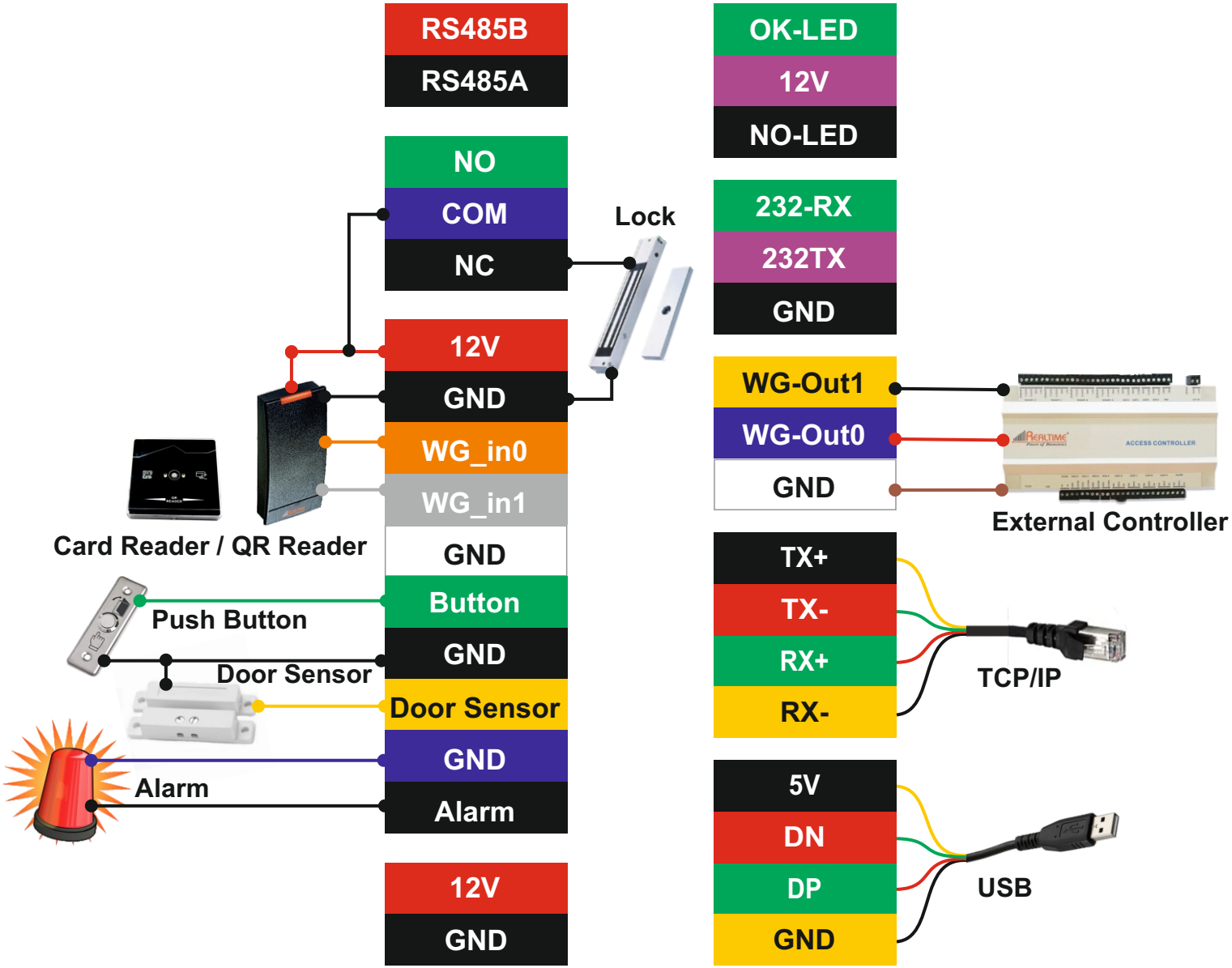
Model : Realtime Pro 1700